M10000842 PCB.SchDoc

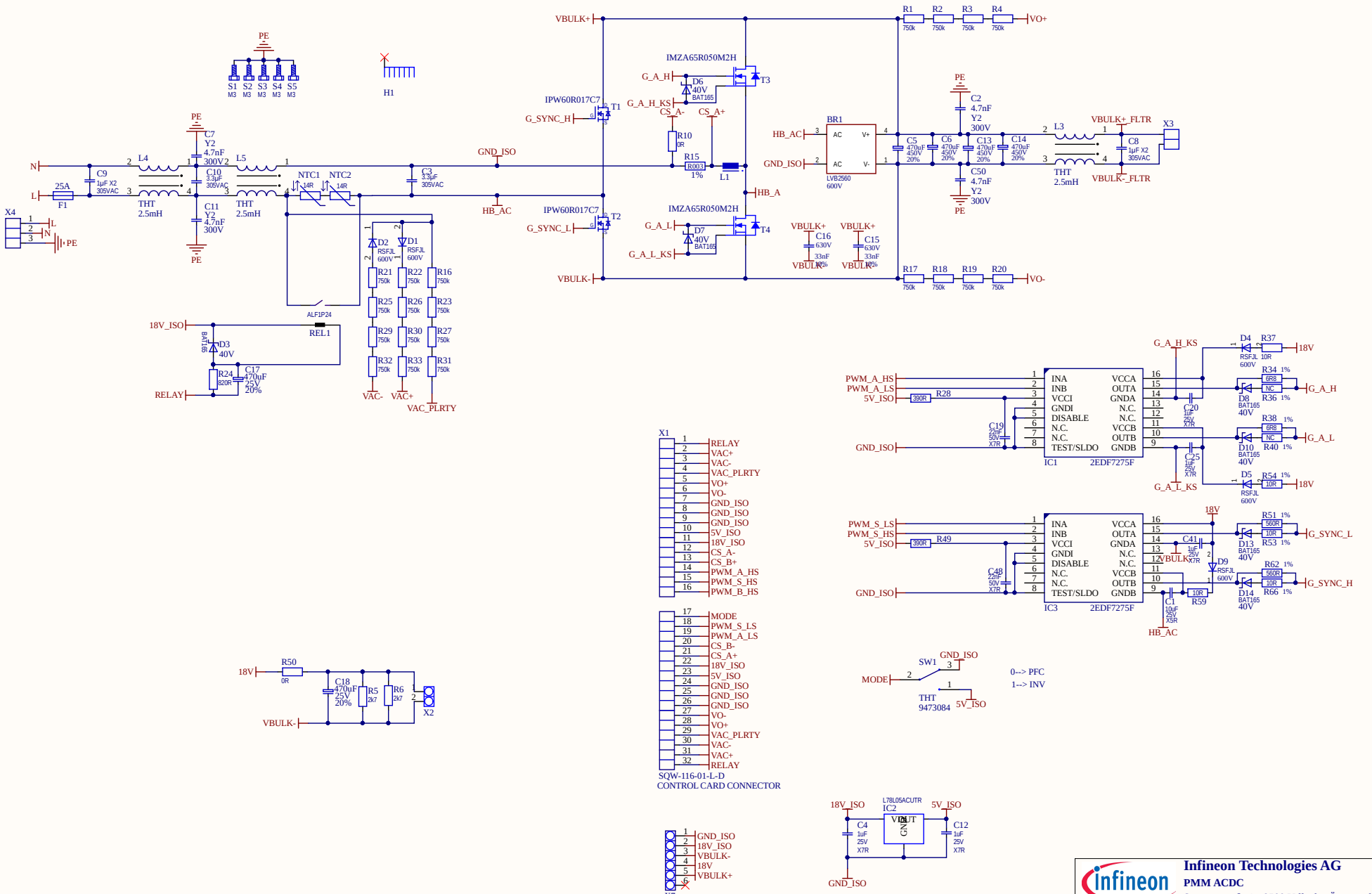

Infineon Technologies Austria AG assumes no liability for re-use, application, customer product design or infringement of patents related to the present material.
and is not considered by Infineon Technologies Austria AG to be part of a finished end product for general consumer uses.
This Evaluation Board/Kit/Module/Layout is intended for use for ENGINEERING DEVELOPMENT, DEMONSTRATION, OR EVALUATION PURPOSES ONLY

Infineon Technologies AG
PMM ACDC
Siemensstraße 2 - 9500 Villach - Österreich

Title	Interleaved ZVS PFC		
Variant	[No Variations]	Approved	<Appr.>
Size: A3	Document Name: M10000842 PCB.SchDoc	Rel.	Rev. <Rev.>
Author: Manuel Escudero Rodriguez			
Date: 17.12.2019 Time: 11:42:08	SVN Revision: 190 [Locally Modified]		
© Infineon Technologies AG 2016. All Rights Reserved.	Sheet of		

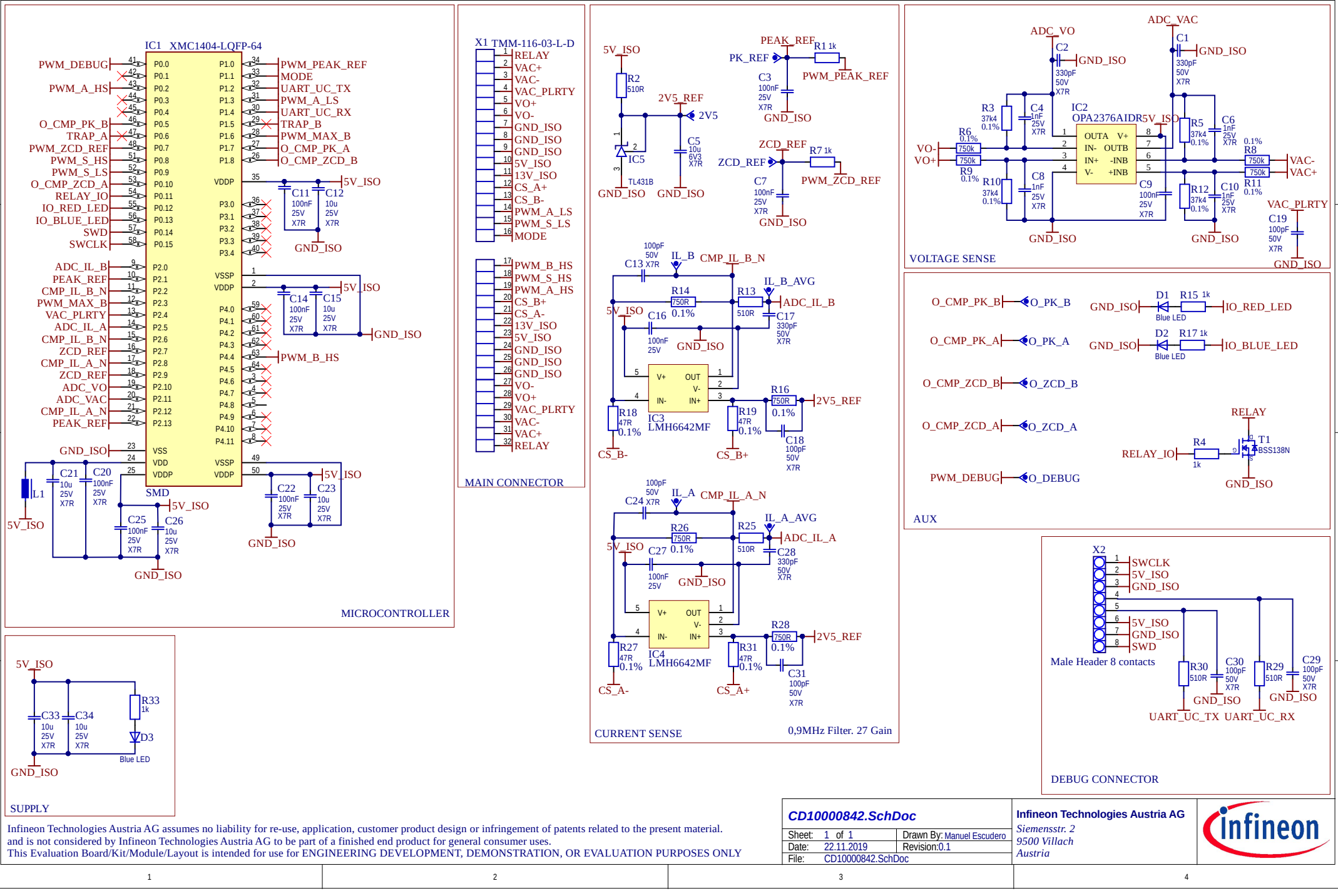

Infineon Technologies Austria AG assumes no liability for re-use, application, customer product design or infringement of patents related to the present material.
and is not considered by Infineon Technologies Austria AG to be part of a finished end product for general consumer uses.
This Evaluation Board/Kit/Module/Layout is intended for use for ENGINEERING DEVELOPMENT, DEMONSTRATION, OR EVALUATION PURPOSES ONLY

CD10000842.SchDoc		
Sheet: 1 of 1	Drawn By: Manuel Escudero	
Date: 22.11.2019	Revision:0.1	
File: CD10000842.SchDoc		

Infineon Technologies Austria AG
Siemensstr. 2
9500 Villach
Austria

M100002321.SchDoc

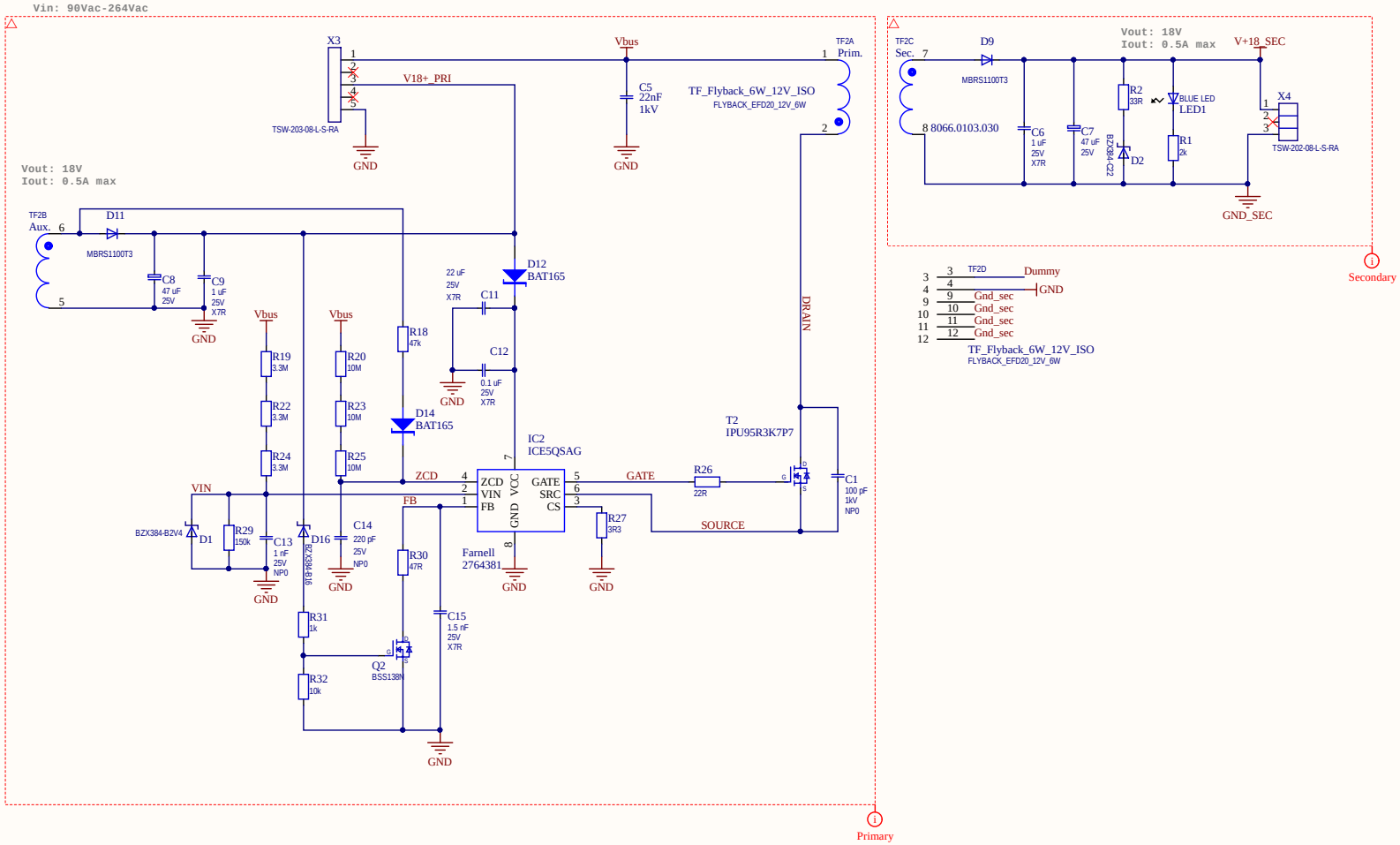

Title			
Variant	[No Variations]	Approved	<Appr.>
Size: A3	Document Name M100002321.SchDoc	Rel.	Rev.
Author:			
Date: 22.11.2019 Time: 09:46:16	SVN Revision:		
		Sheet	of